Cranium and mandible imaging protocol: A guide for publication-quality digital photography of the skull (FOROST Skull Photography Protocol)

Socorro Báez-Molgado Human Evolution Research Center, University of California, Berkeley
Kelsie Hart University of California, Berkeley
Erika Najarro University of Washington
Sabrina B. Sholts Stockholm University, Sweden
W. Henry Gilbert California State University, East Bay; Human Evolution Research Center, University of California, Berkeley

---

The analysis of human bones unites paleoanthropology, physical anthropology, forensic anthropology, anatomy, and bioarchaeology. These fields work toward different goals, from forensic anthropologists identifying human remains to paleo-anthropologists studying human evolution; but at their core they are all bound by osteology. Osteology is a largely visual science, and images are a big part of publication and communication, but there is no consensus on a universal standard for photographic documentation of osteological collections. We present here a standard that we have developed for FOROST collaborators.

The FOROST Metabase of osteological trauma and pathology images comprises contributions from numerous institutions all over the world. Contributors to the database have frequently asked the FOROST development team for advice regarding photography methods. Previously, this advice was disseminated to FOROST contributors on an individual basis. The **FOROST Skull Photography Protocol** (**FOROST SPP**) is essentially a collection of this advice that has been organized, improved, and expanded for the benefit of FOROST users and collaborators.

The primary objective of the **FOROST SPP** is to standardize a methodology for the production and documentation of cranium images in six anatomical planes and mandible images in four anatomical planes using a digital SLR (DSLR) camera. This protocol provides detailed descriptions of the proper anatomical alignment of the cranium in each view, assuring that images provide consistent and accurate information to facilitate comparative analysis. The **FOROST SPP** is designed for the photography of reconstructed crania that are at least 50-75% complete, with both facial bones and cranial vault present. Mandibles can be photographed in four anatomical planes using the same materials and methods outlined in the **FOROST SPP.**

Although experience with DSLR cameras is desirable, viable images can be produced without extensive photography experience by following the guide. Furthermore the protocol utilizes materials that are accessible and relatively affordable, enabling implementation worldwide.

Any individual or institution which works with human bones can benefit from the use of the **FOROST SPP.** Standardized images facilitate comparison in all fields engaging in osteological analysis. Ultimately, the **FOROST SPP** endeavors to foster collaboration and communication through the standardization of cranial photography methods.

Materials

- DSLR camera (for more information, see "Procedure," step 1)
- 55 mm camera lens
- Laptop with connection to camera
- Camera copy stand with vertical adjustment
- Sturdy table
- Measuring tape, at least 2 m in length
- Step ladder with oversized slip-resistant steps
- Masking tape
- Clean black velvet, three pieces each measuring approximately 1 m²
- Cloth bags of various shapes and sizes filled with sand. Rings or donut shapes are useful (see "Recommendations")
- Small box to support the scale (measuring approximately 10 x 10 x 5 cm, the exact size is not significant)
- 10 cm scale
- Marker
- Plastic or wood rulers (see "Recommendations")
- Disposable gloves (such as latex or neoprene)
- 4 or more lamps, adjustable in three dimensions (see step 5)
- Extension cord and power strip for lamps, if needed
- Lighting diffusers and reflectors (see "Recommendations")
- Tripod
- Duct tape or push pins
- Flat packing foam
- Large box to support the mandible (measuring at least 30 x 30 x 5 cm, the exact size is not significant)

Procedure

1. Choose a camera and accessories

The DSLR camera used should have a resolution of over three megapixels, and the lens should have an aperture that can be tightened to at least f16. A 55 mm camera lens is ideal for most setups (zoom lenses with ranges that include 55 mm can be very versatile). A live computer interface is essential for real-time review of captured images (DeGusta et al. 2007). It is recommended to use a back-up system, such as a second hard-drive, for image storage to prevent any unintentional loss of data. Photo editing software (such as Adobe Photoshop™) is highly recommended for post-processing.

2. Camera and copy stand setup

Use a camera copy stand to photograph the cranium in five anatomical views (all except the posterior view, which requires the use of a tripod).

- Always completely finish the camera and copy stand setup (step 2) before removing the specimen from storage.
- If using a camera copy stand that is large enough to accommodate a camera height of at least 1.2 meters (a "large camera stand"), set up the stand so that the camera lens will be parallel to the stand base (Figure 1).
- If using a camera copy stand that cannot accommodate a camera height of at least 1.2 meters (a "small camera stand"), set up the stand on top of a table so that the camera lens will be parallel to the floor. Place weights or a heavy object on the base of the small camera stand for security (Figure 2).
- Attach the camera securely to the stand, and wrap the camera strap around the vertical portion of the stand for added stability.
- Set up the camera lens at a distance of about 1.20 meters from the floor or stand base for adult crania, and about 1 meter for juveniles.
- Mark the center and edges of the camera frame with tape placed on the floor (if using small stand) or stand base (if using large stand) under the camera lens.
- To view the camera's display, use a step ladder with oversized, slip-resistant steps. Be sure the ladder is placed at a safe distance from the specimen.

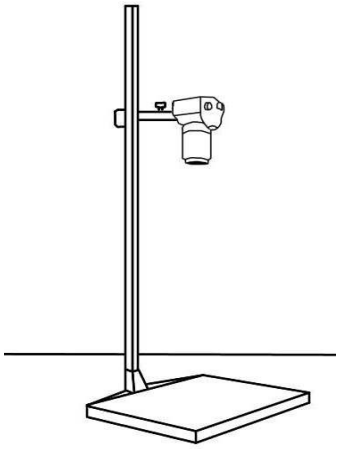

Figure 1. Large camera copy stand (greater than 1.2 meters) with vertical adjustment. This is the preferred setup.

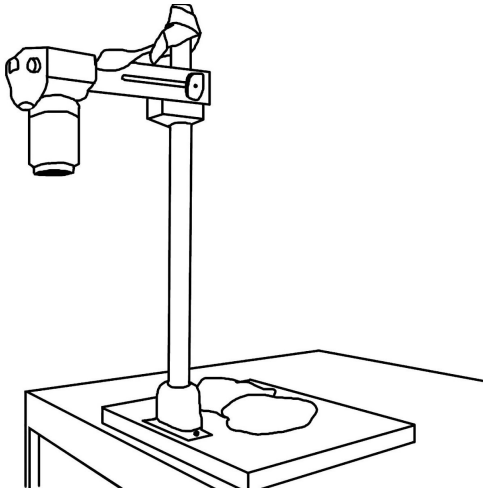

Figure 2. Small camera copy stand (less than 1.2 meters) with vertical adjustment, placed on a table. The camera arm is reversed and weights are used to stabilize the base.

3. Cranium setup

Place a few sand bags in the center of the camera frame, using the piece of tape as a guide. For the cranium use a donut- or ring-shaped sand bag to cradle the specimen. Place the small box next to the sand bags in the desired location of the scale; this box will elevate the scale into focus (Figure 3). Use care to insure not only that the scale is in focus, but also that the scale is in the same plane as the most important feature of the specimen. The scale should be as close to the center of the frame as possible to prevent parallax distortion. This is especially important for lenses with focal lengths less than 55 mm. Cover the sand bags and box with clean black velvet (Figure 4). Place the specimen on the ring-shaped sand bag in the rough anatomical position desired and place the scale on top of the velvet-draped box. Use a marker to record the specimen information on a piece of masking tape and attach it to the scale.

Check the camera's viewfinder: the cranium should be centered in the frame and the scale should be visible, in focus, and not touching the cranium. Make sure that the velvet is as smooth as possible or it will reflect light on the folds. Use a piece of tape to remove any lint, dust, or other particles. Although it often seems to many beginning digital artists that such background noise will be simple to remove post-process, in reality it consumes much more time to eliminate these artifacts with software.

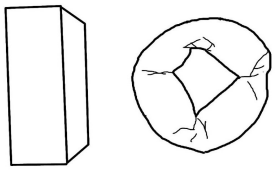

Figure 3. A ring-shaped sand bag, placed along with other sand bags, will cushion the cranium. The small box is used to elevate the scale.

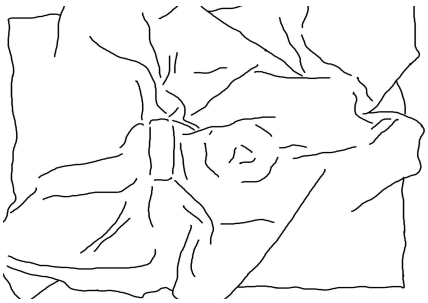

Figure 4. Black velvet draped over the small box and sand bags.

4. Alignment of cranium

The cranium should be photographed in six anatomical views. The position of the cranium in each view is achieved through the precise alignment of three anatomical planes. First identify Frankfurt Horizontal (the transverse plane). Defined at the World Conference on Anthropology in 1884, Frankfurt Horizontal is the plane defined by right and left porion and left orbitale. The coronal and sagittal planes are defined relative to Frankfurt Horizontal and the body's midline. Because no cranium is perfectly bilaterally symmetrical, absolute precision in determination of coronal and sagittal planes is elusive. Approximations are made using anatomical features that are generally symmetrical, like the mastoid processes. Be cognizant of possible asymmetry in all but the determination of Frankfurt Horizontal, which is rigidly defined.

Align the cranium using rulers and manipulating or adding sand bags as needed. Rulers, both normal and angular, are particularly useful for checking the alignment of the mastoid processes and the Frankfurt Horizontal plane (Figures 5 and 6). Check the camera's display to assure that the cranium is aligned symmetrically and that no unwanted elements are shown.

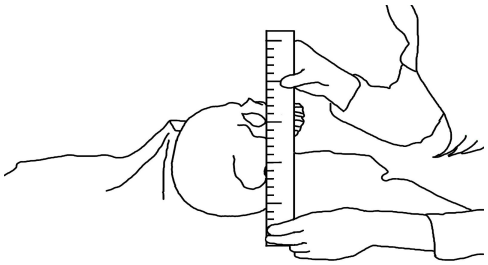

Figure 5. Alignment of Frankfurt Horizontal.

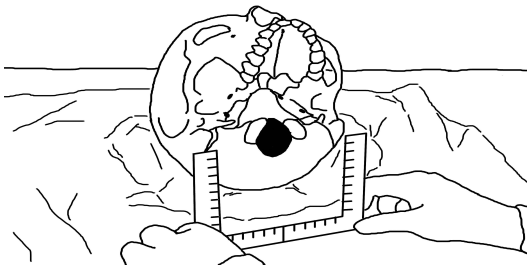

Figure 6. Alignment of the mastoid processes.

4.1 Anterior view of cranium

Place the posterior aspect of the cranium onto the ring-shaped sand bag with the anterior aspect of the cranium towards the camera.

- Frankfurt Horizontal should be perpendicular to the floor.
- The apices of the mastoid processes should be approximately equidistant to the floor (Figure 6).
- The zygomatics, orbits, and mastoid processes (if visible) should be symmetrical relative to the sagittal plane in the camera's display.
- See figure 16. Photo of cranium in anterior (AP) view.

4.2 Basilar / Inferior view of cranium

Place the superior aspect of the cranium onto the ring-shaped sand bag with the inferior aspect of the cranium towards the camera. Orient the cranium with the palate at the top of the camera frame and the occipital at the bottom.

- The sagittal plane should be perpendicular to the floor.
- Frankfurt Horizontal should be parallel to the floor.
- The apices of the mastoid processes should be more or less equidistant from the floor, depending on individual bilateral variation.
- The zygomatic arches should be symmetrical about the sagittal plane in the camera’s display.
- See figure 16. Photo of cranium in basilar (BAS) view.

4.3 Left lateral view of cranium

Place the right lateral aspect of the cranium onto the ring-shaped sand bag with the left lateral aspect of the cranium towards the camera.

- The sagittal plane should be parallel to the floor.
- Frankfurt Horizontal should be perpendicular to the floor.
- The imaginary line connecting the apices of the mastoid processes should be more or less perpendicular to the floor, depending on individual bilateral variation. This is most easily seen from the basal aspect of the cranium (Figure 7).
- Only the left mastoid process, the left styloid process, and the left half of the dental arcade should be visible in the camera's display.
- See figure 16. Photo of cranium in left lateral (LL) view.

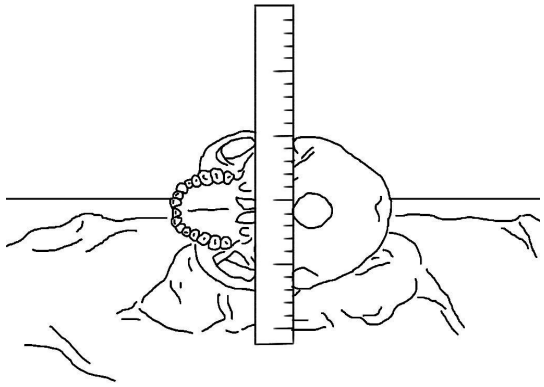

Figure 7. Alignment of the mastoid processes in lateral view.

4.4 Right lateral view of cranium

This view is simply the reverse of the left lateral view. Place the left lateral aspect of the cranium onto the ring-shaped sand bag with the right lateral aspect of the cranium towards the camera.

- Use the same alignment criteria as the left lateral view.
- Only the right mastoid process, the right styloid process, and the right half of the dental arcade should be visible in the camera's display.
- See figure 16. Photo of cranium in right lateral (LR) view.

4.5 Superior view of cranium

Place the basilar / inferior aspect of the cranium onto the ring-shaped sand bag with the superior aspect of the cranium towards the camera. Orient the cranium with the occipital at the top of the camera frame and the frontal at the bottom.

- The sagittal plane should be perpendicular to the floor.
- Frankfurt Horizontal should be parallel to the floor.
- The apices of the mastoid processes should be more or less equidistant from the floor.
- The visible portions of the zygomatics should be equal and symmetrical relative to the sagittal plane in the camera's display.
- See figure 16. Photo of cranium in superior (SUP) view.

4.6 Posterior view of cranium (use tripod)

The facial skeleton is very delicate and can be damaged if the anterior aspect of the cranium is placed on the sand bags. To photograph the cranium in posterior view a tripod should be used, and the cranium placed on a table.

Set up the tripod, table, and other materials according to the **Mandible Photography Protocol** (page 8). Cover the table with flat packing foam to protect the cranium, then place the large, sturdy box (measuring at least 30 x 30 x 5 cm) on top of the table. Place a ring-shaped sand bag on the box near the front edge, and cover the box and sandbags with black velvet.

Place the base of the skull on the box, posterior towards the camera. The occipital should rest on the sandbag and extend about 1 cm beyond the edge of the box (Figure 8). This will allow the photograph to capture the contours of the cranium.

- The sagittal plane should be perpendicular to the table.
- Frankfurt Horizontal should be parallel to the table. Adjust the sand bags placed on the box underneath the velvet to elevate the posterior aspect of the cranium into proper alignment (Figures 8 and 9).
- The apices of the mastoid processes should be more or less equidistant from the box's front edge.
- See figure 16. Photo of cranium in posterior (PA) view.

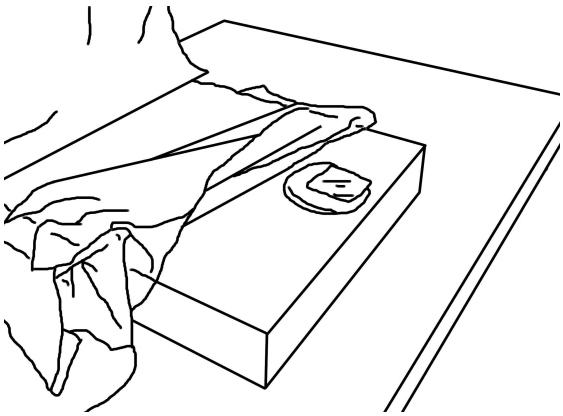

Figure 8. Observe the sandbags placed on the edge of the box and underneath the velvet to elevate the posterior aspect of the cranium.

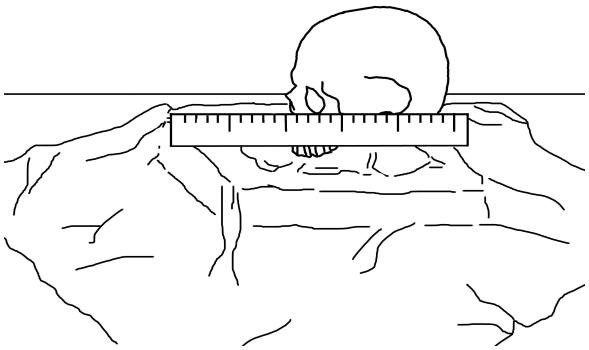

Figure 9. Alignment of Frankfurt Horizontal for posterior view.

5. Lighting setup

Lighting the specimen is the most important and time-consuming step to ensure a quality photograph. There are many different ways to achieve proper lighting of the cranium, so it is recommended to take several test photographs with different lighting setups. The cranium should be indirectly illuminated from all directions, revealing the topography of the cranial features while minimizing heavy shadows.

One simple and effective setup is to arrange lamps outside the four corners of the frame to provide light that is oblique, indirect, and diffused (Figure 10). Another simple lighting method is outlined in the RHOI fossil photography guide, "Standardize lighting to two adjustable sources: a direct source (spotlight) illuminating from the upper left, and a diffuse source [...] illuminating from the lower right. The direct light source should be positioned oblique to the specimen so that important morphological features cast shadows. The diffuse light source should fill in much of the shadowed area without casting any of its own shadows" (RHOI 2008).

David Brill, a famous photographer of fossil hominids, has called skull illumination 'painting with light,' (Brill, pers. comm.), and this way of approaching a setup helps one focus on every square centimeter of the frame, filling dark spots with reflectors or small light sources and reducing glare using diffusing filters or abraded/acid etched mirrors. As mentioned, lighting can be incredibly time consuming, but careful attention to lighting detail is absolutely essential. People without any knowledge of lighting or photography can easily 'feel' the difference between a poorly lit and well lit image.

- Lights should be placed a safe distance away from the specimen and in such a way that they cannot fall or be accidentally pushed onto the specimen.

- To soften light, diffusers used for professional photography may be purchased or constructed using some common materials. Any non-flammable semi-translucent material can be used including treated vellum paper, white cloth, or packing foam.
- To avoid a fire hazard, keep the light diffusers away from any incandescent lights except when the photo is being taken.
- Mirrors, aluminum foil, or plain white paper can be used to reflect light onto areas of shadow.

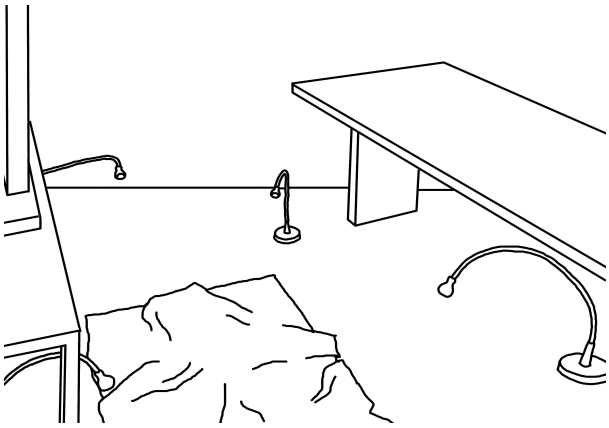

Figure 10. A sample lighting method with four adjustable lights at each corner around the specimen.

6. Adjust camera settings

Still photography with a relatively large depth of field under low-light conditions is feasible using a stabilized DSLR camera. To achieve this, adjustments need to be made to three camera settings known as the "exposure triangle:" aperture size, ISO, and shutter speed (Peterson 2004). These three settings mechanically or digitally control how light or dark the image will be, which, of course, also depends on how the specimen is illuminated (see step 5). Consequently it is necessary to take many test photos while experimenting with the lighting and camera settings. Once a successful combination of lighting and camera settings is achieved, these settings can be used for all of the photographs with only minor adjustments as necessary for each anatomical view.

Before making adjustments to the exposure triangle: set the camera lens to 55mm, set the camera to manual mode, turn off the flash, and set the timer to 10 seconds.

6.1 Aperture / f-stop

This setting controls the size of the lens aperture (iris) and thus the depth of the field of focus (the depth of field). For cranial photography, a large depth of field is necessary so that all features of the cranium will be in focus. Use a large f-stop because this will narrow the aperture and enlarge the depth of field, but do not make the iris tighter than necessary. An extremely tight iris can negatively affect image quality.

The available range of f-stop values varies from lens to lens. Note that when working at the extremes of the performance range of a lens (such as using a 200 mm lens at a distance of 1.5 m), a high f-stop can cause visual distortion even when the subject appears to be in focus. This protocol recommends using a 55 mm lens at a distance of 1.2 m and an f16, which should not cause any significant distortion.

6.2 ISO

This setting controls the camera's sensitivity to light. High ISO numbers will increase the camera's sensitivity to light but also result in a more grainy image. It is best to use the camera's optimal ISO and adjust the exposure using shutter speed (below).

6.3 Shutter speed

This setting controls the duration of exposure. Because this protocol uses a stabilized camera under low light conditions, a slow shutter speed can be used (greater than 1 second); but note that a slow shutter speed can result in a blurry image if there is any vibration of the camera. Stabilization of the camera and stand as

described below, as well as the use of a 10 second timer, will minimize vibrations of the camera.

7. Check the camera for a final look at the image

The cranium should be centered in the camera frame and properly aligned. The black velvet and the scale should not touch the sides of the cranium. The scale and cranium should be fully visible, in focus, and well-lit.

8. Take the photograph using a 10 second timer

9. Review the photograph

Check the image on the camera's display or on a computer. Make sure the cranium is well-lit everywhere and in focus; the cranial features should be visible in sharp detail when viewed at a zoom value of 100% (where each screen pixel equal one image pixel). It is highly recommended that you visualize a grid of approximately square centimeters over the image. Then scan the grid squares one-by-one. This is almost always more effective that a gestalt approach due to human nature's tendency to focus intensely on features useful for individual recognition and disregard other features. If necessary, make adjustments and retake the photo. Failures to see small errors– like dark spots, washed areas, lost edges, and shadowed features– are the most common mistakes of advanced amateur bone photographers.

When uploading the photo to the computer, label the image according to a desired naming protocol. Always save the main image document as a RAW file, a TIFF file or some other format that does not compress the image. In other words, do not use the JPEG format or compress the TIFF.

10. Edit the photo (optional)

Once the images have been uploaded onto the computer, an image-editing program like Adobe Photoshop™ can be used to make small adjustments. Brightness, contrast, and other non-distorting filters are acceptable, but adjustments that alter the image like airbrushing, painting, or edge enhancements are unacceptable in scientific publication (Gilbert & Richards, 2000). The scale can be straightened or replaced with a digital scale rendered in the same proportions. Often, however, this is best done at the time of publication for internal consistency. The background, except for a small margin around the cranium itself, can be replaced with solid black. This process can be quite complicated, so it is best to use a guide like the HERC image background editing guide (HERC). This eliminates any imperfections or wrinkles in the velvet.

<u>Photography of the Mandible</u>

Mandibles can be photographed in four anatomical views using the same materials and methods outlined in the **FOROST SPP.** The position of the mandible in each view is achieved through the alignment of the mandibular condyles.

Camera and tripod set up

Use the tripod to photograph the mandible in anterior and lateral views.

- Place a sturdy table against an empty wall, and cover the surface of the table with a sheet of flat packing foam to protect the mandible.
- Use duct tape or push pins to attach a background of black velvet (measuring approximately 1 m²) to the wall, at least 50 cm above the surface of the table.
- Place the large box (measuring at least 30 x 30 x 5 cm) on the table at a safe distance from the table's front edge. Place the box so that its edges are parallel to the edges of the table. This box will help elevate the

specimen to show details along the inferior aspect of the mandible.

- Set up the tripod in front of the table about 80 cm from the front edge of the table. Attach the camera to the tripod. The total distance from the camera lens to the front edge of the box should be 1 meter (Figures 11 and 12).
- Adjust the height of the tripod so that the specimen (when placed on top of the box) will be centered in the camera frame.
- Cover the box and table with a piece of black velvet measuring approximately 1 m².
- Use a pen to record the specimen information on a piece of masking tape and attach it to the scale. Place the scale on the table directly under the specimen. You can rest the scale against the front of the box to keep it upright.

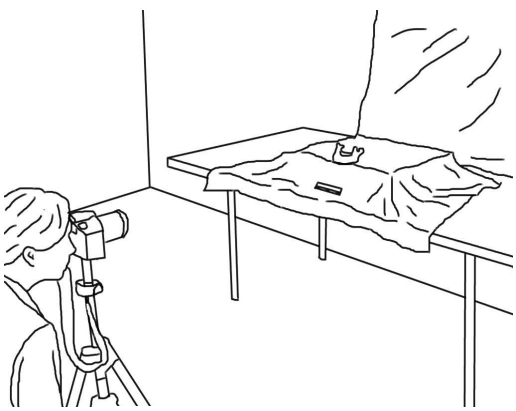

Figure 11. Tripod setup.

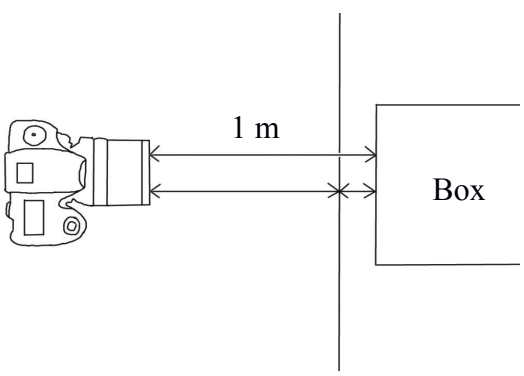

Figure 12. The total distance between the camera lens and the front edge of the box should be 1 meter.

Anterior view of mandible

Place the mandible on the large box with its anterior aspect towards the camera. Look through the camera's viewfinder and adjust the height of the tripod until infradentale is aligned with the center of the camera frame. Infradentale is the midline point on the mandible at the superior tip of the septum between the central incisors (White, et. al. 2011: 57).

- The mental protuberance of the mandible should extend about 0.5 cm beyond the front edge of the box. This will allow the photograph to capture the contours of the mandible.
- Use a ruler to precisely align the mandibular condyles so that they are parallel to and equidistant from the front edge of the box (Figure 13).
- See figure 17. Photo of mandible in anterior (AP) view.

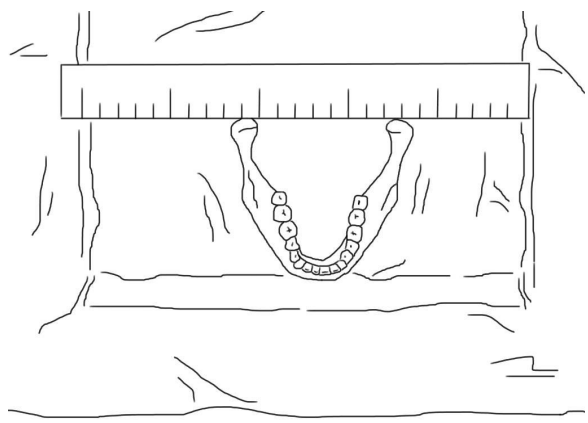

Figure 13. Alignment of the mandibular condyles using a ruler.

Left lateral view of mandible

Place the mandible on the large box with its left lateral aspect towards the camera.

- The left gonial angle of the mandible should be on the box's front edge.
- Use a ruler to align the mandibular condyles so that they are approximately perpendicular to the box's front edge.

- Only the left coronoid process, left mandibular condyle, and left half of the dental arcade should be visible in the camera's display.
- See figure 17. Photo of mandible in left lateral (LL) view.

Right lateral view of mandible

Simply the reverse of the left lateral view. Place the mandible on the large box with its right lateral aspect towards the camera.

- The right gonial angle of the mandible should be on the box's front edge.
- Use a ruler to align the mandibular condyles so that they are approximately perpendicular to the box's front edge.
- Only the right coronoid process, right mandibular condyle, and right half of the dental arcade should be visible in the camera's display.
- See figure 17. Photo of mandible in right lateral (LR) view.

Superior view of mandible (use camera copy stand)

For the superior view of the mandible, it is recommended to use the camera copy stand as described in the **FOROST Skull Photography Protocol.** Set up the camera at a distance of 70 cm. To cushion and support the mandible, use rectangular or square sand bags arranged to form a flat, level surface (instead of the ring-shaped sand bag used for the cranium).

Cover the sandbags with a piece of black velvet measuring approximately 1 m². Place the inferior aspect of the mandible on the flat platform of sandbags with the superior aspect of the mandible towards the camera. Orient the mandible with the mandibular condyles at the top of the camera frame and the incisors at the bottom.

- Use a ruler to precisely align the mandibular condyles so that they are parallel to the top and bottom edges of the camera frame (Figure 13).
- The occlusal surface of the mandibular dentition should be approximately parallel to the floor.
- See figure 17. Photo of mandible in superior (SUP) view.

<u>Recommendations</u>

General Recommendations

- A team of two or more is recommended for efficiency, one manipulating the specimen while the other operates the camera (Figure 14).
- Turn off the camera when not in use to preserve battery life.
- For large collections it is beneficial to setup two adjacent photography stations: one with the camera copy stand (for the anterior, lateral, basilar, and superior views of the cranium plus the superior view of the mandible) and one with the tripod (for the posterior view of the cranium plus the anterior and lateral views of the mandible). This allows for production-line photography of multiple crania and mandibles.
- Setting up photography stations and establishing a successful combination of lighting and camera settings is time consuming. When photographing multiple specimens for large projects, it is recommended to designate and secure a photography area.

Safety Guidelines

- Be aware of the specimen at ALL times and eliminate any potential hazards or threats to the specimen's safety.
- Always wear gloves when handling the specimen. Handle the specimen very carefully and only when necessary.
- Never place the specimen directly onto a hard surface– always cover the surface with sand bags or a layer of foam for protection.

- When a specimen is not being photographed, immediately return it to a safe storage location. Never leave a specimen in a photo setup unattended.
- Place all objects (such as lamps) at a safe distance from the specimen so that they cannot fall onto the specimen if knocked over. Secure all cords and cables with tape to avoid any stumbles that might endanger the specimen.

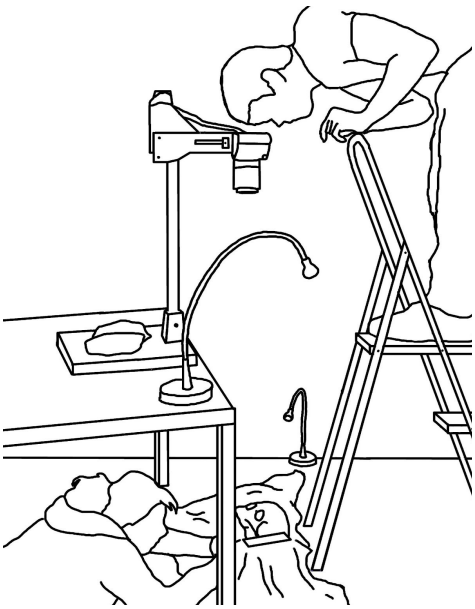

Figure 14. Two people taking photographs, with one positioning the cranium and the other operating the camera.

Materials

- The cloth bags can be filled with any fine grained material such as sand, rice, lentils, or silicone beads.
- If you have no access to a sewing machine, socks of various sizes can be filled with the chosen material and then sealed with hand-stitching at the leg opening. To make a ring-shaped bag fill a long sock with the chosen material, form the sock into a ring-shape, and seal by sewing the leg opening to the toe of the sock.
- Tape or a lint roller can be used to remove debris from the black velvet. In general, this is much faster than using Photoshop™.
- Several plastic or wood rulers of various lengths, both straight and angular, may be helpful for different phases of cranial alignment (Figure 15). A clear plastic ruler can be useful for checking Frankfurt Horizontal (porion – orbitale) because it does not obscure cranial features.
- Do not use metal rulers because they can scratch and damage bone.
- A small flashlight may be useful when checking the alignment, especially when overhead lighting is poor.

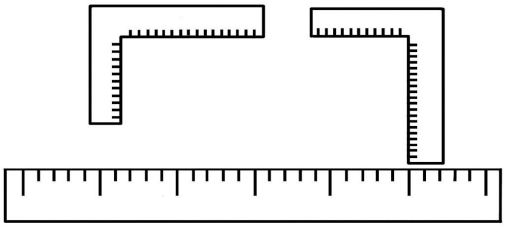

Figure 15. Straight and angular rulers.

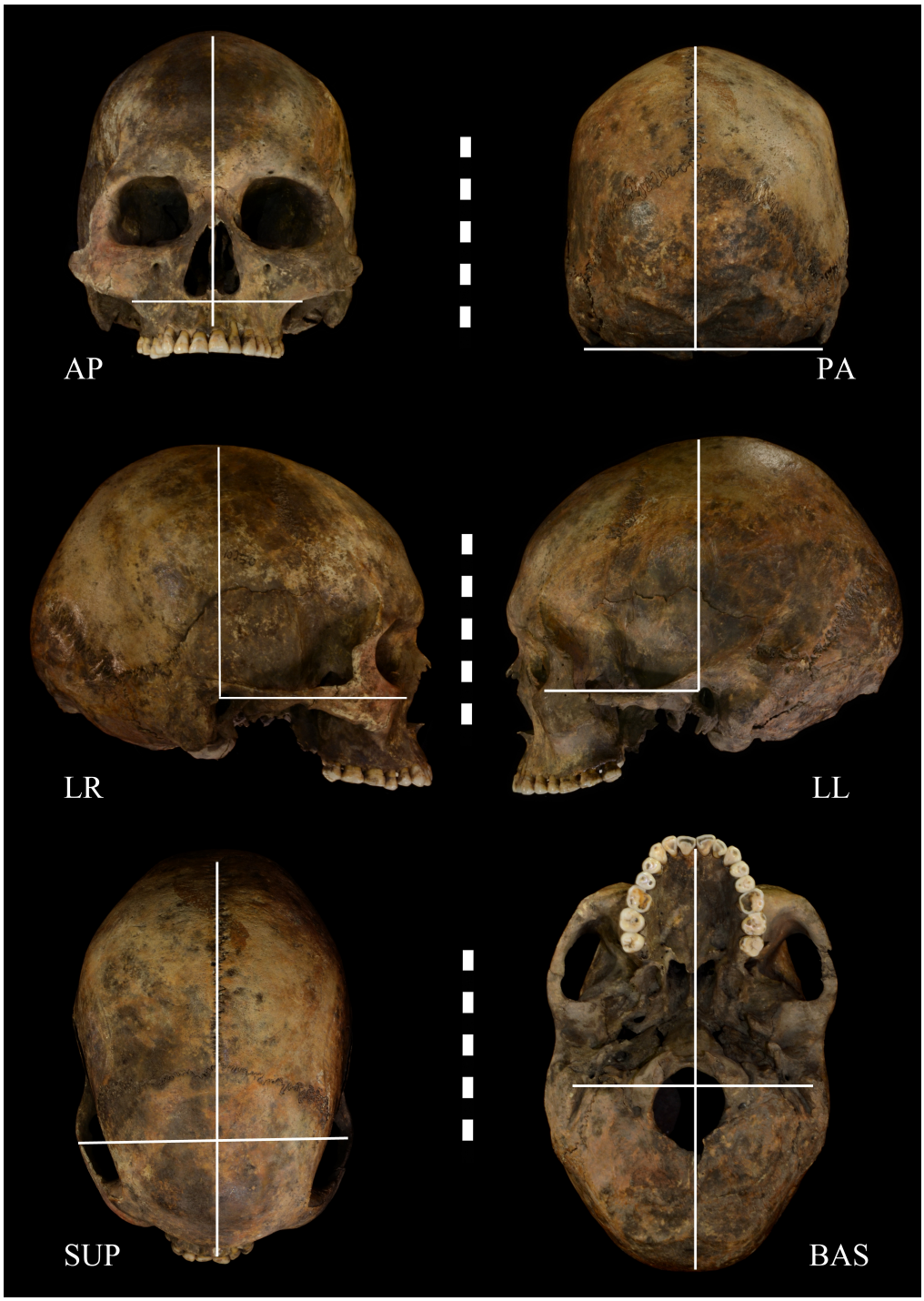

Figure 16. Final images created using the **FOROST Skull Photography Protocol (FOROST SPP)**, showing the cranium in six anatomical views. Anterior view (AP). Posterior view (PA). Right lateral view (LR). Left lateral view (LL). Superior view (SUP). Basilar / inferior view (BAS).

Courtesy of the Phoebe A. Hearst museum of Anthropology and the Regents of the University of California. Photography by the FOROST Development Team, (Catalogue No. 12-10250).

Figure 17. Final images created using the **FOROST Skull Photography Protocol (FOROST SPP)**, showing the mandible in four anatomical views. Anterior view (AP). Superior view (SUP). Right lateral view (LR). Left lateral view (LL).

Courtesy of the Phoebe A. Hearst museum of Anthropology and the Regents of the University of California.
Photography by the FOROST Development Team, (Catalogue No. 12-10250).

References Cited:

DeGusta, Gilbert, Richards, & White. "Methods for Studying Bone Modifications." In: *Tafonomía, medio ambiente y cultura: Aportaciones a la Antropología de la Muerte*. Serrano & Terrazas, Eds. Mexico City: Universidad Nacional Autónoma de México Instituto de Investigaciones Antropológicas, 2007.

Gilbert & Richards. "Digital imaging of bone and tooth modifications." *Anatomical Record (New Antatomist)* 261 (2000): 237-246.

HERC Image background editing guide. Human Evolution Research Center (HERC). http://herc.berkeley.edu/HERC_info_pages/Image_edit_proto.php. Retrieved Aug 28, 2013.

Peterson, Bryan. *Understanding exposure: How to shoot great photographs with a film or digital camera*. Amphoto Books, 2004.

RHOI Photography Protocol. Revealing Hominid Origins Initiative (RHOI), 2008. http://rhoi.berkeley.edu/RHOI_photo/RHOI_Photography_Protocol.html. Retrieved Dec 9, 2012.

White, Black, & Folkens. *Human Osteology.* 3rd ed. Academic Press, 2011.

Author Contact:
S. Baez-Molgado socorro@forost.org
K. Hart kelsiemae@gmail.com
E. Najarro enajarr3@gmail.com
S. Sholts sabrina.sholts@gmail.com
W.H. Gilbert henry.gilbert@csueastbay.edu